ADI 3186-E

CONCOA®

Certified ISO 9001

652 Series BlendMaster™

INSTALLATION AND OPERATION INSTRUCTIONS

Before Installing or Operating, Read and Comply with These Instructions

Controls Corporation of America
1501 Harpers Road Virginia Beach, VA 23454
To Order Call 1-800-225-0473 or 757-422-8330 • Fax 757-422-3125
www.concoa.com

March 2006
Supercedes October 2002

THIS PAGE INTENTIONALLY LEFT BLANK

INTENDED USE OF PRODUCT

The CONCOA gas mixer has been designed to mix two non-flammable, non-corrosive, and non-oxidizing gases. The gas mixer will maintain the set mixture ratio from full flowrate to zero flow. The gas mixer can be wall mounted or bench mounted (see table below) in an indoor location.

EXPLANATION OF MODEL NUMBER

		Full Flow	Wall Mountable	Bench
Series 652	BlendMaster™ Model 1000	1000 CFH	Yes	Yes

Specification Sheet

The specification sheet is a summary of the important technical information about the gas mixer. This includes the inlet/outlet pressure conditions, pressure settings, voltage requirements and pressure alarm options. This data sheet also lists the major parts and recommended spare parts.

Mechanical Description

Located on the front panel of the mixer are an on/off switch, a fuse and gauges for the major gas inlet pressure, minor gas inlet pressure, mixed gas delivery pressure.

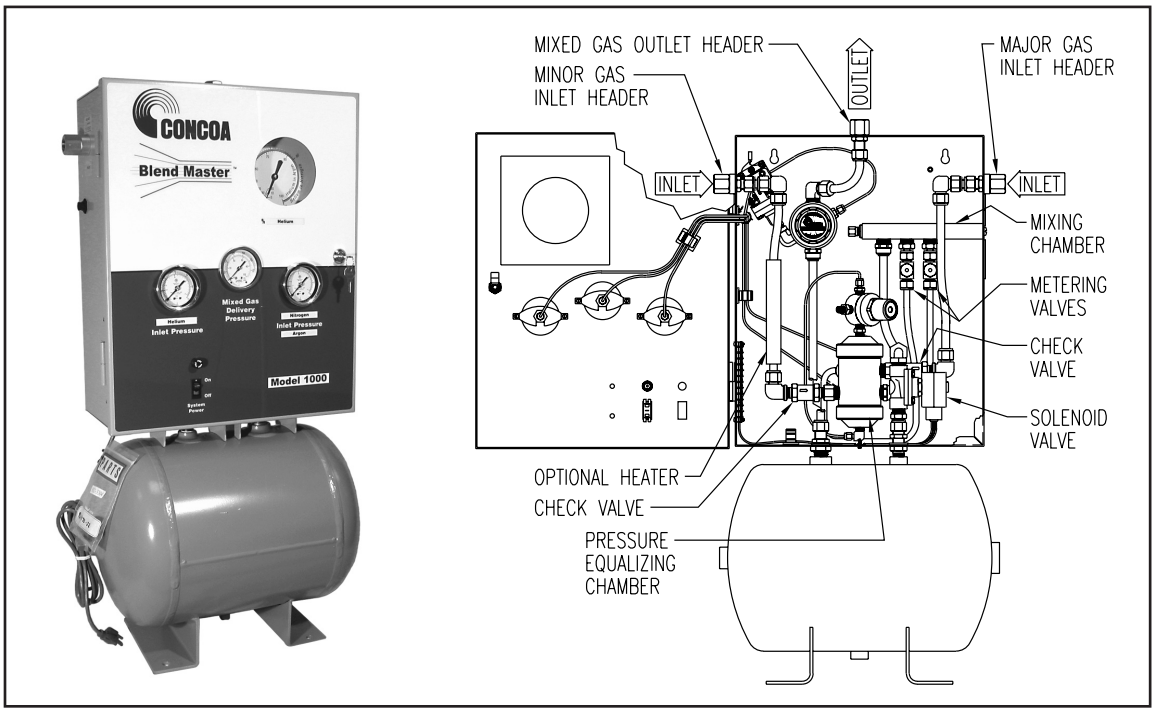

Figure 1 - The 652 Series BlendMaster™ Model 1000

The gas inlets are located on each side of the gas mixer. The gas mixer is designed for inlet pressures of 100-125 PSI. Each of these gas inlets is a 1/2 inch female NPT fitting and is labeled for a specific gas. On the top of the enclosure is a 1/2 inch NPT female outlet header.

Following the check valves is the pressure equalization subsystem. This system reduces and equalizes the major and minor gas pressures to within ±1 psig. The pressure equalizing subsystem contains 20-micron filters. The equalized pressure gases then flow through the dual metering valve subsystem into the mixing chamber where they are precisely mixed. The mixing chamber contains an in-line set of flow splitters and spiral fins that create a well-mixed flow.

After the mixing subsystem the gas mixture passes through the solenoid valve which controls the on/off flow of gas into the surge tank. The pressure in the surge tank will cycle between 58 and 70 PSIG. A pressure switch senses this pressure and turns the inlet solenoid valve on and off.

The gas mixture flows out of the surge tank and through the delivery pressure regulator. The gases then pass through the outlet header and to the process.

Pressure Alarm Kit Option

A pressure alarm kit is an option to alert personnel when either of the 2 input gas pressures becomes low. In the pressure alarm kit, each of the input gases has a pressure switch. Normally these pressure switches will be set to 100 PSIG. When either of the inlet gas pressures falls below 100 PSIG, the pressure switch will trip causing a light on the remote alarm to illuminate and a buzzer to sound. The buzzer may be silenced by pushing the buzzer silence button on the remote alarm. Once the pressure has been raised to the proper level (over 100 PSIG}, the light will be extinguished and the system will automatically reset.

Operating Principle

Constant mixture percent is accomplished by maintaining equal flowrate at equal pressures across the major and minor gas flow control devices, regardless of the delivery flowrate. This is accomplished by isolating the gas mixing function from the delivery function. This is the purpose of the tank. The tank solenoid valve is opened when the pressure switch on the tank senses the low pressure limit. When the valve opens, the gases flow into the surge tank until the pressure switch reaches the upper limit. Then the solenoid valve closes and the incoming gases are stopped. Gas delivery to the process comes from the tank supply. The cycling frequency is dependent upon the flowrate out of the tank and will increase with increasing delivery flowrate. The gas mixer will not operate properly unless there is at least 100 PSIG pressure maintained at the input ports.

WARNING: Do not allow any liquid gases to enter the gas mixer. Liquid gases will damage the internal parts and may cause personal injury.

A safety relief valve has been installed in the system to relieve unsafe high pressures. This valve is set to relieve at approximately 225 PSIG. Do not over pressurize the gas inlets to the mixer; serious damage may result such as blown lines and gauges and possible personal injury.

Carbon Dioxide Regulator Freeze Up

Regulators flowing carbon dioxide may “freeze” due to the pressure drop of the carbon dioxide in the regulator. If this “freeze” should occur, a manifold heater assembly should be used.

Gas Storage Systems

Bulk liquid tanks are excellent supply sources for gas mixers provided that the diameter of the piping to the gas mixer is adequate. High-pressure cylinders manifolded together are also an acceptable supply system. The high pressure must be reduced by using the high pressure kit to the lower pressures (100-125 PSIG) required by the gas mixer.

Manifolds

CONCOA manifold systems are adequate in capacity for the gas mixer. CONCOA automatic change over systems are recommended to ensure that a continuous supply of gas is available to the gas mixer.

WARNING Most gases, such as carbon dioxide, argon, and nitrogen are colorless and odorless. These gases can displace the oxygen in a confined area and cause death or injury by asphyxiation. Therefore, the gas mixer should not be place in a confined area without ventilation. Leaks from the mixing system or associated piping could cause oxygen deficiency in such an area.

USE OF PRODUCT

The mixer is intended for use in non-corrosive, non-flammable, and non-oxidizing gas applications. Please note the safety information shown in later sections.

This equipment will perform in conformity with the description contained in this manual and accompanying labels and/or inserts when installed, operated, maintained, and repaired in accordance with the instructions provided. This equipment must be checked periodically. Improperly working equipment should not be used. Parts that are broken, missing, worn, distorted or contaminated, should be replaced immediately. CONCOA recommends that a telephone or written request for service advice be made to CONCOA Customer Service in Virginia Beach, Virginia, PHONE: 1-800-225-0473, FAX: 1-757-422-3125, or E-MAIL: info@concoa.com.

USER RESPONSIBILITY

This equipment or any of its parts should not be altered without prior written approval by CONCOA. The user of this equipment shall have the sole responsibility for any malfunction that results from improper use, faulty maintenance, damage, improper repair, or alteration by anyone other than CONCOA or a service facility designated by CONCOA.

CUSTOMER ASSISTANCE

In the event of equipment failure, call CONCOA Customer Service. Please be prepared to provide the model number and serial number of the equipment involved, in addition to details regarding its application. This would include inlet and outlet pressures, flow rate, environmental conditions, and gas service.

Installation Planning

Things to consider before removing the system from the box....

1. Know the properties and special handling requirements of the gas being used. Many specialty gases are quite dangerous (flammable, toxic, corrosive, simple asphyxiant, or oxidizers). This product is not intended for use in toxic or corrosive applications. Equipment failure or misuse may lead to problems such as a release of gas through the relief valve or regulator diaphragm. Please note the enclosure is not sealed and may leak gas from faulty components. Proper safety measures should be established to handle these and other component failures.

2. Be sure that the assembly purchased is suitable for the gas and type of service intended. The specification label provides the following information:

   a. Model number
   b. Serial number
   c. Maximum inlet pressure
   d. capacity
   e. mixture components
   f. voltage

   Be sure that the equipment received conforms to the order specifications. The user is responsible for selecting equipment compatible with the gas in use, and conditions of pressure, temperature, flow, etc. Selection information can be found in CONCOA technical data sheets. In addition, CONCOA representatives are trained to aid in the selection process.

3. Inspect the assembly upon receipt to be sure that there is no damage or contamination. Pay particular attention to connecting threads. While CONCOA assembles and tests system components to exacting leak-tight standards, the customer should also inspect for any loosening of parts that may occur in shipping or installation. Loose parts may be dangerously propelled from an assembly. If there are adverse signs (leakage or other malfunction), return the assembly to the supplier. While it is advised that soiled regulators be returned

for cleaning, simple external dust or grease may be removed by a clean cloth and if required with aqueous detergent suitable for the application. If there are signs of internal contamination, return to the supplier.

4. Before system start-up, it is recommended that all systems be pressure tested, leak tested, and purged with an inert gas such as nitrogen.

SAFETY

Comply with precautions listed in C.G.A. Pamphlet P-I, Safe Handling of Compressed Gases in Containers.

Consult the cylinder distributor for the proper use of cylinders and for any restrictions on their use (such as flow rate and temperature requirements).

Always observe the following safety practices:

√ Store cylinders with valve caps screwed on, and cylinders chained to a supporting wall or column.

√ Handle cylinders carefully and only with valve caps screwed on. The cap will prevent the cylinder valve from breaking off at the top of the cylinder if the cylinder is accidentally dropped or falls over. The cap also protects the cylinder valve from damage to screw threads, which could cause leaky connections.

√ No smoking should be permitted near oxygen nitrous oxide, flammable gases and flammable mixtures and in area where cylinders are stored.

√ Where oxygen or nitrous oxide is used, the manifold and cylinders must be kept clean. No oil, grease, or combustible substances should come in contact with oxygen or nitrous oxide storage or handling equipment. Such materials in contact with oxygen or nitrous oxide are readily ignitable and when ignited, will burn intensely.

√ Never use an open flame when leak testing.

WARNING GAS MIXER HAZARDS

Only use the gases shown on the labels in the gas mixer. These gas mixers are not designed to accept flammable or corrosive gases. Use of these types of gases could damage the gas mixer and cause personal injury.

The gas mixers are not designed to accept liquid gases. Exposure to liquid gases will damage the internal parts and may cause personal injury.

√ Any damage caused by high-pressure gases or liquid gases is not covered by the warranty.

√ Always close all cylinder valves before disconnecting cylinders from a manifold.

√ Always remove all empty cylinders from a manifold before connecting full cylinders.

√ Always test cylinders to be sure they are full before connecting to a manifold.

All gas distribution piping systems must meet the appropriate industrial standards for the intended service and must be thoroughly cleaned before using. For the United States, some applicable safety rules and precautions are listed below:

1. American National Standards Institute standard Z49.1 or Safety in Welding and Cutting, American Welding Society, 2501 NW Seventh Street, Miami, FL 33125.
2. N.F.P.A. Standard 51, Oxygen-Fuel Gas Systems for Welding and Cutting, N.F.P.A., 470 Atlantic Avenue, Boston, MA 02210.
3. N.F.P.A. Standard 51B, Cutting and Welding Processes, (see Address in #2)
4. CONCOA Publication ADE 872, Safety Precautions in Welding and Cutting.

5. Local ordinances.
6. O.S.H.A.
7. C.G.A. Pamphlet C-4, American National Standard Method of Marking Portable Compressed Gas Containers to Identify the Material Contained.*
8. C.G.A. Pamphlet G-4, Oxygen-Information on the properties, manufacture, transportation, storage, handling, and use of oxygen.
9. C.G.A. Pamphlet G-4.1, Equipment Cleaned for Oxygen Service.
10. C.G.A. Pamphlet C-4.4, Industrial Practices for Gaseous Oxygen Transmission and Distribution Piping Systems.
11. C.G.A. Pamphlet G-5, Hydrogen - Information on the properties, manufacture, transportation, storage, handling, and use of hydrogen.
12. C.G.A. Pamphlet G-6, Carbon Dioxide - Information on the properties, manufacture, transportation, storage, handling, and use of carbon dioxide.
13. C.G.A. Pamphlet G-6.1, Standard for Low Pressure Carbon Dioxide Systems at Consumer Sites.
14. C.C.A. pamphlet P-1, safe handling of compressed gases iin containers.
15. C.G.A. Safety Bulletin SB-2, Oxygen Deficient Atmospheres.

C.G.A. pamphlets can be obtained from the Compressed Gas Association, 1235 Jefferson Davis Highway, Arlington, VA 22202-3239, (703) 979-0900. Publications: (703) 979-4341. Fax: (703) 979-0134.

LOCATION

Keep all cylinders and manifolds away from any source of high temperature over 120°F (50°C) or possible fire hazards. High-pressure gas contained in a closed cylinder becomes increasingly dangerous when exposed to high temperature because pressure increases. Manifolds installed in open locations should be protected from weather conditions. During winter, protect the manifold from ice and snow. In summer, shade the manifold and cylinders from continuous exposure to direct sunlight. Always leave access to the manifold for cylinder replacement.

INSTALLATION

The site chosen for the installation of the system shall be level, well ventilated, and at a safe distance from sources of flames, sparks, and excessive heat. The system should not be placed in an area that may subject it to damage from passing trucks, cranes, or other heavy machines.

Installing the system:

a. Be sure to consider all factors when selecting materials.
b. Do not use oil or grease on fittings.
c. Be sure that all fittings are secure and leak tight. Teflon tape should be used on pipe threads.
d. Relief valve: The purpose of the relief valve is to protect the system and its components only If there is pressure sensitive equipment downstream of the system, it is recommended that an appropriately sized relief valve (534 Series) be installed to protect this equipment.

Mount the system to a flat surface using the appropriate hardware at hole locations provided in the bracket. Dimensions for these holes are shown in Figure 2.

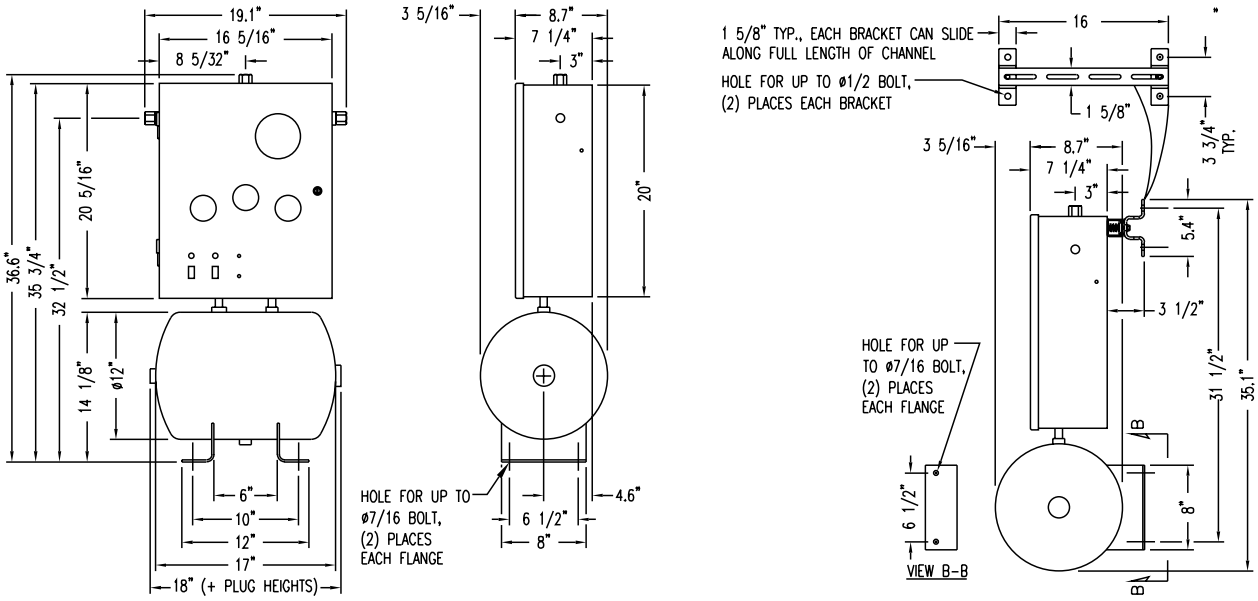

Figure 2 - Dimensions for the 652 Series BlendMaster™ Model 1000

INLET AND OUTLET CONNECTIONS

General:

Use an open-end wrench, not a pipe wrench, to install accessories to the system. **ALWAYS hold the bulkhead fitting with a wrench when installing the accessories. Do not allow the bulkhead fitting to turn; otherwise, connections inside the box may be loosened.** The NPT connections require Teflon tape on the threads to make a gas tight seal. On stainless steel connections, the Teflon tape helps prevent the connections from galling when tightening or loosening. Follow these rules when using Teflon Tape.

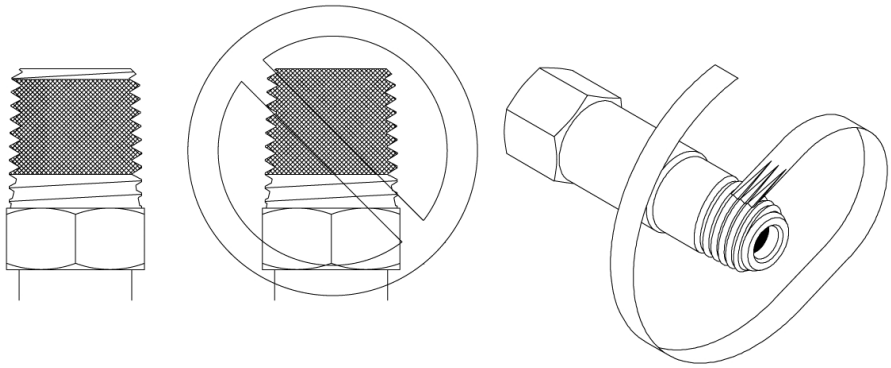

Figure 3 - Teflon Tape Placement

Before applying Teflon tape, inspect the NPT threads and if necessary, clean the fitting to remove any dirt or thread sealant that remains on the threads. Start the Teflon tape on the second thread as shown in Figure 3; make sure the tape does not overlap the end of the fitting. As the tape is wrapped in the direction of the thread spiral, pull tightly on the end of tape so that the tape conforms to the threads. Wrap the tape around the threads twice. Cut off the excess tape and press the end firmly into the threads.

Connecting to a cylinder:

1. Before removing the cylinder cap, move the cylinder of gas to the work site:

   a. Secure cylinder to the floor, wall, or bench with appropriate chain, strap, or stand to prevent toppling.
   b. Remove the cylinder cap.
   c. Be sure the cylinder valve is tightly closed (clockwise)
   d. Remove the cylinder valve plug, if any.
   e. Inspect the cylinder valve and threads for damage or contamination.

2. Secure the cylinder connection to the cylinder in the following manner:

   a. Do not force. Tightening the nut onto the cylinder connection should be easy. If it is not, the connection may be wrong for the type of gas being used.
   b. Left-hand threads are used on some cylinder connections. A notch in the middle of the hex nut typically indicates a left-hand thread.
   c. Gaskets are used on some inlet connections. Be sure the gasket is in good shape. Do not over-tighten to avoid squashing the gasket into the gas line. Keep extra gaskets on hand.
   d. Never use oil or grease on regulator or cylinder fittings, as it may contaminate pure gases, or create a fire hazard.

Installing the Outlet Connection:

The system has the outlet connection at the top of the box. The connection is a 1/2" NPT connection. Connect tubing to the system that is compatible with the application and is capable of handling the pressure required.

Pressurizing the system for the first time (non-manifold use):

Before system startup, it is recommended that all systems be pressure tested, leak tested, and purged with an inert gas such as nitrogen. To accomplish this with connections other than a CGA 580, it will be necessary to use an adapter. The recommended use of an adapter is for temporary use only, for system start up and checks. Adapters should never be used on a permanent basis.

1. Wear safety glasses and gloves.

2. Be sure that both ends of all hoses or pigtails are secured before pressurizing. Turn the line regulator knob counterclockwise until the knob stops turning.

3. When first pressurizing, do not stand in front of or contact the switchover system. Slowly open the cylinder valve. Observe the high pressure gauge for a rise in pressure up to full cylinder pressure.

4. Keep the hand wheel or wrench on the open cylinder valve at all times, to allow prompt emergency shut-off.

5. Inspect all connections for leaks and fix any leaks. A leak detection solution may be applied to the connections (if compatible with the application) which indicates leaks by bubbling. To further check for leaks, or if the leak detection solution can not be used, close the cylinder valve for a period of time (recommended 24 hours), and observe the high pressure gauge for a drop in pressure. If so indicated, recheck the CGA connection and all other high-pressure port connections. Never attempt to fix a leak under pressure. If leaks are detected, depressurize the system and retighten the connection. Begin again.

WARNING: While CONCOA assembles the autoswitch system components to exacting leak-tight standards, the customer should also inspect for any loosening of internal parts that may occur in shipping or installation by completing the pressure decay test detailed above. If all external leaks have been found, corrected, and the system still indicates a leak, disassemble the front cover from the autoswitch after removing the eight screws shown in Figure 8. Check for leaks on the system's fittings as described above.

NOTE: It is recommended that shutoff valves and pipe unions be installed on the inlet gas pipelines and a union installed on the mixed gas pipeline to allow the gas mixer to be easily removed if necessary.

6. Slowly turn the line regulator knob clockwise. This will increase the pressure of the line. Adjust to the desired working pressure and again check for leaks using the methods described above.
7. Turn on and adjust the supply pressure for both gases to 100-125 PSIG.
8. If a shutoff valve has been placed on the outlet piping, it should be turned off. If there is no shutoff valve present, you may shutoff the flow by turning the adjustment knob on the outlet pressure regulator. Next, turn on the power switch. The mixed gases should begin filling the surge tank. After a few seconds, the surge tank should be filled and the flow should automatically turn off.
9. Crack open the shutoff valve or begin to open the outlet pressure regulator to get a flow through the gas mixer. The mixing system should begin to cycle. The gas mixer will require about 15 cycles to attain a new mixture ratio. During cycling the inlet pressure gauges should stay above 100 PSIG at all times.
10. As a final adjustment, the outlet pressure regulator should be changed to the desired outlet pressure.
11. When the gas mixer is operating normally, you will hear the solenoid valve cycle on and off. The gas mixer is now ready for production gas mixing.
12. The temperature of both inlet gases should be equal to within ± 5°F.

OPERATION

The gas mixer will automatically begin its gas mixing when the process uses enough mixed gases to drop the tank pressure sufficiently to open the solenoid valve. When mixed gas is no longer required, the gas mixer will automatically stop. If the valve/pressure switch continues to cycle after normal process demand has ceased, leaks exist in the mixed gas pipeline and should be fixed. The gas mixer may be left on continuously as the solenoid valve will remain closed if there is no process demand.

Changing The Gas Mixture

To change the gas mixture the operator rotates the mixture adjustment knob to the appropriate percentage. The dial shows the minor gas percent. For instance, to produce a 25% carbon dioxide/75% argon mixture the dial should read 25%. Approximately 15 on/off cycles of the gas mixer are required to obtain an accurate new mixture. A cycle is defined by the clicking of the solenoid valve.

Do not force the knob past the zero point since this could harm the valve seats.

MAINTENANCE

The system should be checked for leaks and proper function at regular intervals (see TROUBLESHOOTING).

Any leaks in the system should be corrected immediately.

The gas mixer requires minimum maintenance. The parts that wear out are the solenoid valve and pressure switch. All the moving parts in the gas mixer are expected to last several years under normal conditions, To obtain a list of the recommended spare parts, contact CONCOA or refer to the specification page.

TROUBLESHOOTING

Checking The Gas Mixture

If the gas mixture is in question, the mixer should be checked with an analyzer. Allow the gas mixer to cycle at least 15 times between each change in setting to get a correct reading. Be careful to follow the analyzer manufacturers operating instructions. If there is any question about the operation or the suitability of a particular gas analyzer for the gas mixture, please consult CONCOA.

If the gas mixer seems to be producing an incorrect mixture, follow these steps.

It is suggested that each of the following steps be taken in sequence. To avoid possible misadjustment, after each step test the mixer to determine if the problem has been fixed. If so, make no more adjustments.

The following information uses the standard pressure settings; some gas mixers may be built with non-standard pressure settings. Refer to the specifications to determine the actual pressure settings.

1. Check to be sure that the inlet pressures stay above 100 PSIG at all times. If either inlet pressure drops below this figure, the gas mixer will be starved for the particular gas and an improper mixture will be created. If it is found that the inlet pressures are dropping below 100 PSIG, the inlet pressure to the mixer must be increased. This may require a higher regulator setting at the manifold or the liquid storage tank. Also, look for blockages in the incoming pipeline such as filters and undersized regulators. Do not use smaller than ½" piping for the major gas.
2. Install tank pressure gauge and note the reading . Under normal operation the pressure in the surge tank will fluctuate between 58 and 70 PSIG. Once the pressure drops to 58 PSIG, the pressure switch turns on the solenoid valve which allows new gas to flow into the mixer. This continues until the surge tank reaches 70 PSIG. {It should not go higher than 70 PSIG.) At 70 PSIG the pressure switch will turn the solenoid valve off. If this pressure is not correct, an improper gas mixture may result. The pressure switch needs recalibrating or replacing if tank pressures are not 58-70 PSIG.
3. If none of the previous steps rectify the problem, you may call CONCOA Customer Service for help. For troubleshooting help with a gas mixer, the following information is required.
   a. Model and serial number of the gas mixer.
   b. Inlet major and minor gas pressure in flowing condition, which is shown on the gauges on the front of gas mixer.
   c. Pressure (flowing condition) inside gas mixer.
   d. Surge tank pressure setting during a mixing cycle; for example, gas flow starts at 58 PSIG and stops at 70 PSIG.

The phone number is 1-800-225-0473. Ask for gas mixer service help.

Typical symptoms listed below indicate regulator malfunctions needing repair.

Replace with a clean, repaired and tested, or new regulator obtained from CONCOA.

1. Gas leakage at the regulator outlet when the adjusting screw of the regulator is completely backed out.
2. With no flow through the system (downstream valves closed and adjusting screw in) line pressure steadily increases above set pressure.

3. Gas leakage from bonnet (adjusting screw/knob end off regulator).
4. Gas leakage from any joint.
5. Excessive drop in working pressure with regulator flowing gas.
6. Gas leakage from relief valve.
7. Gas leakage from any gauge.
8. Gauge does not return to zero when not under gas pressure.
9. Gauge does not consistently repeat the same reading.
10. The system makes a noise or hums.

SERVICE

A Unit that is not functioning properly should not be used and should be returned to CONCOA for service. A Return Material Authorization (RMA) number must be issued for any product returned to CONCOA for service. Please contact a Customer Service Representative at 1-800-225-0473 to receive this number. You will be asked to provide:

1. Model Number
2. Gas Service
3. Inlet pressure and type of gas supply
4. Outlet pressure
5. Approximate gas usage

When shipping product back to CONCOA for repair the following steps should be followed:

1. Package the product sufficiently to prevent damage. If possible return product in its orginial packing.
2. Include RMA number on the outside of the carton.
3. Ship prepaid.
4. Include a written decription of the problem you encountered with the product inside the package.
5. Include a statement of the gas service the product was used in.
6. Purge all equipment before shipping to protect the transporter and service personnel. Purging is especially important if the equipment has been in hazardous or corrosive gas service.

THIS PAGE INTENTIONALLY LEFT BLANK

THIS PAGE INTENTIONALLY LEFT BLANK

Warranty Information

This equipment is sold by CONTROLS CORPORATION OF AMERICA under the warranties set forth in the following paragraphs. Such warranties are extended only with respect to the purchase of this equipment directly from CONTROLS CORPORATION OF AMERICA or its Authorized Distributors as new merchandise and are extended to the first Buyer thereof other than for the purpose of resale.

For a period of one (1) year from the date of original delivery (90 days in corrosive service) to Buyer or to Buyer's order, this equipment is warrantied to be free from functional defects in materials and workmanship and to conform to the description of this equipment contained in this manual and any accompanying labels and/or inserts, provided that the same is properly operated under conditions of normal use and that regular periodic maintenance and service is performed or replacements made in accordance with the instructions provided. The foregoing warranties shall not apply if the equipment has been repaired: other than by CONTROLS CORPORATION OF AMERICA or a designated service facility or in accordance with written instructions provided by CONTROLS CORPORATION OF AMERICA, or altered by anyone other than CONTROLS CORPORATION OF AMERICA, or if the equipment has been subject to abuse, misuse, negligence or accident.

CONTROLS CORPORATION OF AMERICA's sole and exclusive obligation and Buyer's sole and exclusive remedy under the above warranties is limited to repairing or replacing, free of charge, at CONTROLS CORPORATION OF AMERICA's option, the equipment or part, which is reported to its Authorized Distributor from whom purchased, and which if so advised, is returned with a statement of the observed deficiency, and proof of purchase of equipment or part not later than seven (7) days after the expiration date of the applicable warranty, to the nearest designated service facility during normal business hours, transportation charges prepaid, and which upon examination, is found not to comply with the above warranties. Return trip transportation charges for the equipment or part shall be paid by Buyer.

CONTROLS CORPORATION OF AMERICA SHALL NOT BE OTHERWISE LIABLE FOR ANY DAMAGES INCLUDING BUT NOT LIMITED TO: INCIDENTAL DAMAGES, CONSEQUENTIAL DAMAGES, OR SPECIAL DAMAGES, WHETHER SUCH DAMAGES RESULT FROM NEGLIGENCE, BREACH OF WARRANTY OR OTHERWISE.

THERE ARE NO EXPRESS OR IMPLIED WARRANTIES WHICH EXTEND BEYOND THE WARRANTIES HEREINABOVE SET FORTH. CONTROLS CORPORATION OF AMERICA MAKES NO WARRANTY OF MERCHANTABILITY OR FITNESS FOR A PARTICULAR PURPOSE WITH RESPECT TO THE EQUIPMENT OR PARTS THEREOF.

ADI 3186-E

Controls Corporation of America
1501 Harpers Road Virginia Beach, VA 23454
To Order Call 1-800-225-0473 or 757-422-8330 • Fax 757-422-3125
www.concoa.com